Automation systems for automatic pedestrian doors

Guide to choosing

Voltage	Number of doors	Weight	Clear opening (min)	Clear opening (max)	Operator	PLUS
24V	1	150kg	750mm	750mm	VISTA SL1	Operator for pedestrian sliding doors with 1 leaf with max weight 150 kg, useful passage 750 mm and crosspiece width 1600 mm.
		100kg		2500mm	VISTA SL C1	Compact operator profile
		250kg	700mm	1400mm	VISTA SW MXL	Ideal for "fail safe" installations (management with batteries)
				1400mm	VISTA SW SXL	Ideal for "fail secure" installations (management with spring)
	2	120+120kg	900mm	900mm	VISTA SL2	For very heavy gate leaves
		80+80kg	800mm	2900mm	VISTA SL C2	Compact operator profile
		2x120kg		3300mm	VISTA TL2	Maximum useful passage
	4	4x80kg	1600mm	4400mm	VISTA TL4	Maximum useful passage

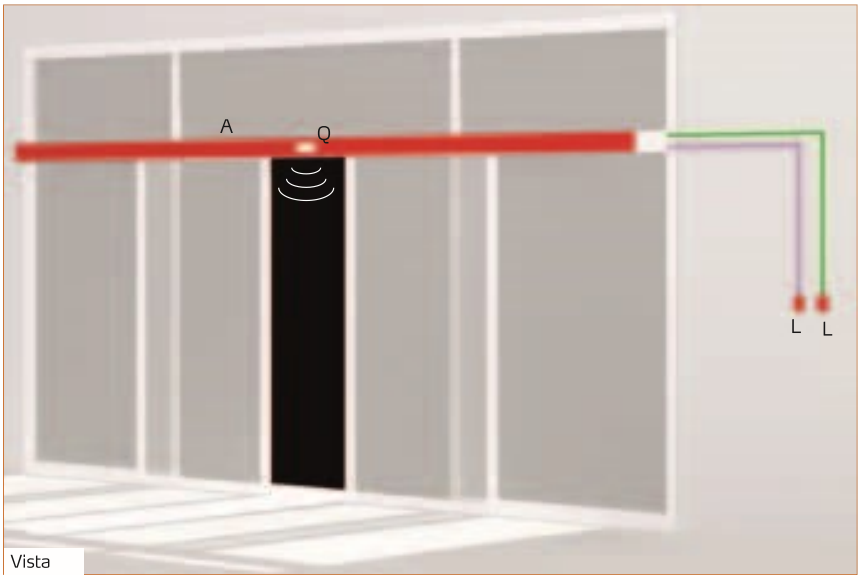

Vista

A	Operator
L	Control system (key selector switch, keypad, badge reader)
Q	Radar
	6x1
	3x1.5

AUTOMATION SYSTEMS FOR AUTOMATIC PEDESTRIAN DOORS

new

phase out

Complete Systems P. 248

accessories P. 238

control unit P. 230
accessories for control units P. 238
set of batteries for control units P. 238
expansion boards P. 239
software P. 240
receivers P. 240
transmitters P. 241
control devices P. 241
activation sensors automatic doors and security P. 242
signalling devices P. 243
safety devices - Photocells and accessories P. 243
safety devices - Sensitive edges P. 245
rubber profiles P. 245
solenoid locks P. 246
release systems P. 246

VISTA SL

BUILDING ACCESS AUTOMATION

U-Link

24 V

ee link

er ready

d-track

Complete range of automation systems for sliding pedestrian doors with a maximum leaf weight of 150 kg.
The control unit, with a programming display and microprocessor technology, makes it possible to control all the main functions automatically.
The cushioned rail and shaped wheels ensure absolutely silent movement.

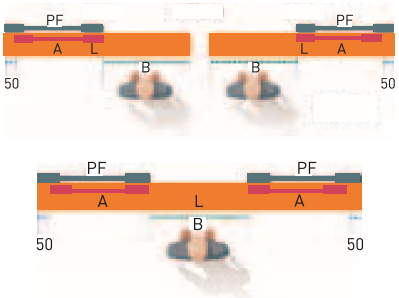

Case length (L)
Opening (B)
Leaf length (A)
Fixed part (PF) A+50

DIMENSIONS (mm)

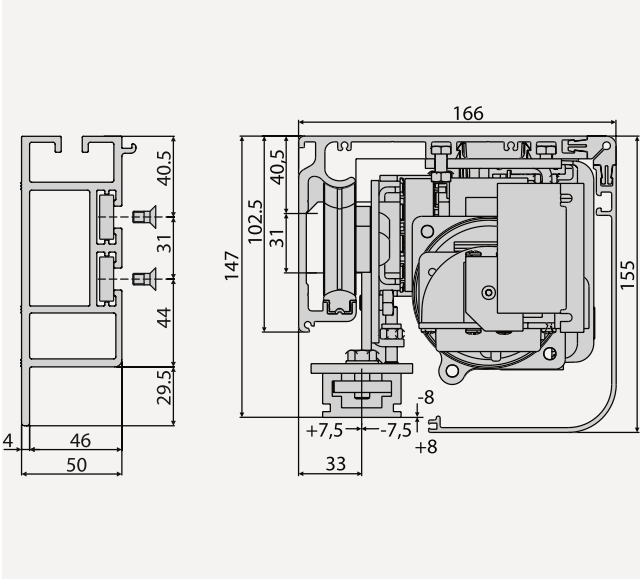

TECHNICAL FEATURES

	VISTA SL1	VISTA SL2
Leaf type	sliding	sliding
Control unit	ARIA EVO	
Manual cycle	reversible	reversible
Motor type	dunker motor	dunker motor
Motor power supply	24 V	24 V
Type of limit switch	encoder + mechanical stop for opening	
Clear opening	from 750 mm to 2250 mm	from 800 mm to 2900 mm
Opening speed	up to 100 cm/sec	up to 200 cm/sec
Closing speed	up to 100 cm/sec	up to 200 cm/sec
Approach speed	from 5 cm/sec to 10 cm/sec	from 5 cm/sec to 10 cm/sec
Impact reaction	Electronic torque limiter	
Locking	mechanical	mechanical
Release	release lever	release lever
Use cycle	continuous	continuous
Environmental conditions	from 0 °C to 50 °C	
Protection rating	IPX0	
Number of doors	1	2
Weight	150 kg	120+120 kg

VISTA 1 - For the natural aluminium version enter the same code as the anodised guard but with the extension 00001 instead of 00002. Contact Bft SpA for the price. For the version with wing attachment profile PRV AA SL included, enter the same code but with the extension 00003 instead of 00002. Contact Bft SpA for the price.

Code	Name	Price (€)	Voltage	A	B	L	Anodised Guard	Price (€)	
P960502 00006	VISTA SL-107	2025.80	24V	800mm	750mm	1600mm	P111411 00002	122.50	U-Link
P960503 00006	VISTA SL-108	2056.10	24V	900mm	850mm	1800mm	P111412 00002	134.10	U-Link
P960504 00006	VISTA SL-109	2090.70	24V	1000mm	950mm	2000mm	P111414 00002	145.60	U-Link
P960505 00006	VISTA SL-110	2121.10	24V	1100mm	1050mm	2200mm	P111415 00002	157.20	U-Link
P960506 00006	VISTA SL-111	2151.50	24V	1200mm	1150mm	2400mm	P111416 00002	168.80	U-Link
P960507 00006	VISTA SL-112	2195.00	24V	1300mm	1250mm	2600mm	P111417 00002	180.40	U-Link
P960508 00006	VISTA SL-113	2225.40	24V	1400mm	1350mm	2800mm	P111418 00002	191.80	U-Link
P960509 00006	VISTA SL-114	2255.70	24V	1500mm	1450mm	3000mm	P111419 00002	203.50	U-Link
P960510 00006	VISTA SL-115	2286.10	24V	1600mm	1550mm	3200mm	P111420 00002	215.10	U-Link
P960511 00006	VISTA SL-116	2316.60	24V	1700mm	1650mm	3400mm	P111421 00002	226.60	U-Link
P960512 00006	VISTA SL-117	2385.50	24V	1800mm	1750mm	3600mm	P111422 00002	243.70	U-Link
P960513 00006	VISTA SL-119	2449.90	24V	2000mm	1950mm	4000mm	P111423 00002	267.30	U-Link
P960514 00006	VISTA SL-121	2472.90	24V	2200mm	2150mm	4400mm	P111424 00002	284.40	U-Link
P960515 00006	VISTA SL-123	2533.40	24V	2400mm	2350mm	4800mm	P111425 00002	307.60	U-Link
P960516 00006	VISTA SL-125	2611.60	24V	2600mm	2550mm	5200mm	P111426 00002	330.80	U-Link
P960517 00002	VISTA SL-208	2254.70	24V	2x450mm	800mm	1900mm	P111413 00002	139.50	U-Link
P960518 00002	VISTA SL-209	2272.00	24V	2x500mm	900mm	2000mm	P111414 00002	145.60	U-Link
P960519 00002	VISTA SL-210	2302.30	24V	2x550mm	1000mm	2200mm	P111473 00002	136.60	U-Link
P960520 00002	VISTA SL-211	2332.70	24V	2x600mm	1100mm	2400mm	P111416 00002	168.80	U-Link
P960521 00002	VISTA SL-212	2371.60	24V	2x650mm	1200mm	2600mm	P111417 00002	180.40	U-Link
P960522 00002	VISTA SL-213	2404.60	24V	2x700mm	1300mm	2800mm	P111418 00002	191.80	U-Link
P960501 00002	VISTA SL-214	2431.40	24V	2x750mm	1400mm	3000mm	P111419 00002	203.50	U-Link
P960523 00002	VISTA SL-215	2461.50	24V	2x800mm	1500mm	3200mm	P111420 00002	215.10	U-Link
P960524 00002	VISTA SL-216	2492.10	24V	2x850mm	1600mm	3400mm	P111421 00002	226.60	U-Link

new
phase out
Complete Systems P. 248
accessories P. 238
control unit P. 230
accessories for control units P. 238
set of batteries for control units P. 238
expansion boards P. 239
software P. 240
receivers P. 240
transmitters P. 241
control devices P. 241
activation sensors automatic doors and security P. 242
signalling devices P. 243
safety devices - Photocells and accessories P. 243
safety devices - Sensitive edges P. 245
rubber profiles P. 245
solenoid locks P. 246
release systems P. 246

P960525 00002	**VISTA SL-217**	**2560.80**	24V	2x900mm	1700mm	3600mm	**P111422 00002**	**243.70**	U-Link
P960526 00002	**VISTA SL-219**	**2625.50**	24V	2x1000mm	1900mm	4000mm	**P111423 00002**	**267.30**	U-Link
P960527 00002	**VISTA SL-221**	**2648.30**	24V	2x1100mm	2100mm	4400mm	**P111424 00002**	**284.40**	U-Link
P960528 00002	**VISTA SL-223**	**2709.40**	24V	2x1200mm	2300mm	4800mm	**P111425 00002**	**307.60**	U-Link
P960529 00002	**VISTA SL-225**	**2787.00**	24V	2x1300mm	2500mm	5200mm	**P111426 00002**	**330.80**	U-Link
P960530 00002	**VISTA SL-227**	**2845.50**	24V	2x1400mm	2700mm	5600mm	**P111427 00002**	**354.00**	U-Link
P960531 00002	**VISTA SL-229**	**2908.90**	24V	2x1500mm	2900mm	6000mm	**P111428 00002**	**376.90**	U-Link

ARIA EVO : Control unit for pedestrian doors

- Application: control unit for pedestrian doors
- Board power supply: 230V single-phase
- Operator power supply: 24V
- Main features: programming with display, incorporated dual channel receiver, anti-crushing, slowdown during opening and closing
- Main functions: automatic re-closing, alarms management, anti-break-in logics

RECOMMENDED ACCESSORIES

D113722 - **VISTA SEL - € 81.00**

Function selector for pedestrian door series VISTA SL, SL C, TL

P111768 - **BBV BATT MODULO VISTA SL - € 136.20** new

Set of backup batteries for VISTA SL

P111445 - **SBV - € 103.00**

Anodised aluminium supporting crosspiece for VISTA SL

P111681 - **PRV AA SL - € 81.40**

Leaf attachment profile for Vista SL

P111680 - **WMP SL SLC - € 13.90**

Contains 2 crossbeam support profiles of length L = 1m each

N733408 - **ERV - € 115.70**

Electric lock for VISTA SL, SL C, TL (use in conjunction with BBV recommended)

P111156 - **PPR - € 14.70**

Door guide slide for automatic doors with aluminium frame

P111158 - **PGI - € 10.00**

Bottom door guide for automatic doors with aluminium frame

P111720 00002 - **SASA 1AM SIST SFOND.1 ANTA MOBILE - € 350.20**

Breakthrough system kit for 1 movable leaf

P111721 00002 - SASA 1AMF SIST SFOND.ANTE 1 MOB + 1 FX - € 427.50

Breakthrough system kit for 1 fixed leaf and 1 movable leaf

P111722 00002 - **SASA 2AM SIST SFOND_.2 ANTE MOB - € 705.60**

Breakthrough system kit for 2 movable leaves

P111723 00002 - SASA 2AMF SIST SFOND.ANTE 2 MOB + 2 FX - € 844.60

Breakthrough system kit for 2 fixed leaves and 2 movable leaves

P111724 00002 - **SASA BRACKETS FOR LEAF BREAKAGE DETECTION PHOTOC. - € 51.50**

Bracket kit for mounting FPA1 photocells for leaf breakage detection

P111725 00002 - **SASA PRA 2,5 PROF.PROT.ANTA FX/MOB 2.5M - € 36.10**

Protection profile for fixed/movable leaf. Length L=2.5m

P111726 00002 - **SASA PRA 5 PROF. PROTEZ.ANTA FX/MOB, 5M - € 58.80**

Protection profile for fixed/movable leaf. Length L=5m

P111610 00002 - **PRV 40.120 MONTANTE ABBATTIMENTO L=5.1 - € 136.00** new

Break-open upright for fixed leaf joint. Length L=5.1m

N733590 - **PRV 40.A54 CERNIERE PER SASA SX - € 24.00** new

Left hinge for joint on fixed leaf

P111263 00002 - **SASAM 2 - € 1073.30** Ph. Out

Antipanic breakthrough system in anodised aluminium, 2 leaves. Length mx 1100 mm

P111753 - **OA-AXIS T - € 293.60**

Active infrared sensor for activation and security with safety test

P111754 - **OA-203C - € 204.00**

Active infrared sensor for activation and presence

P111759 - **OT 3 - € 96.90**

Elbow-operated pushbutton, silver

P111654 - **VIO-DT1 - € 478.40**

Safety and mono-directional activation sensor, dual technology, monitored

P111656 - **VIO-ST - € 309.60**

Infrared safety sensor, monitored

P111676 - **MAGIC SWITCH - € 250.10**

Activation touch button

P111678 - **SPAC - € 46.80**

Pair of locks (2) for glass leaf

P111685 - **KIT FPA2 - € 203.70**

FPA kit with two pairs photocells and brackets for Vista

P111607 00002 - **PRV 40.080 CORNICE ABBATTIMENTO L=6.82 - € 195.00** new

Break-open frame for fixed leaf joint. Length L=6.82m

N733589 - **PRV 40.A53 CERNIERE PER SASA DX - € 24.00** new

Right hinge for joint on fixed leaf

P111163 00002 - **SASAM 1 - € 610.00** Ph. Out

Antipanic breakthrough system in anodised aluminium, 1 leaf. Length mx 1100 mm

P121016 - **RB - € 44.40** Ph. Out

4-channel wall-mounted radio control with rolling code

P111751 - **OA-AXIS II - € 273.00**

Active infrared sensor for activation and security

P111755 - **OA-PRESENCE TN - € 247.20**

Active infrared sensor for security

P111653 - **VIO-DT2 - € 422.10**

Safety and bi-directional activation sensor, dual technology, monitored

P111655 - **IXIO-DT1 - € 557.20**

Safety and mono-directional activation sensor, dual technology, monitored, programmable c.telecom.

P111662 - **VIO-M - € 225.20**

Compact mono-directional activation sensor

P111677 - **PUSH PLATE - € 219.00**

Activation button

P111687 - **KIT FPA MA-I2 - € 226.20**

FPA MA 12 kit with two pairs photocells and brackets for Vista

P111683 - **KIT FPA1 - € 153.60**

FPA kit with pair of photocells and brackets for Vista

new

phase out

Complete Systems P. 248

accessories P. 238

control unit P. 230
accessories for control units P. 238
set of batteries for control units P. 238
expansion boards P. 239
software P. 240
receivers P. 240
transmitters P. 241
control devices P. 241

activation sensors automatic doors and security P. 242
signalling devices P. 243
safety devices - Photocells and accessories P. 243
safety devices - Sensitive edges P. 245
rubber profiles P. 245
solenoid locks P. 246
release systems P. 246

Assembly kits

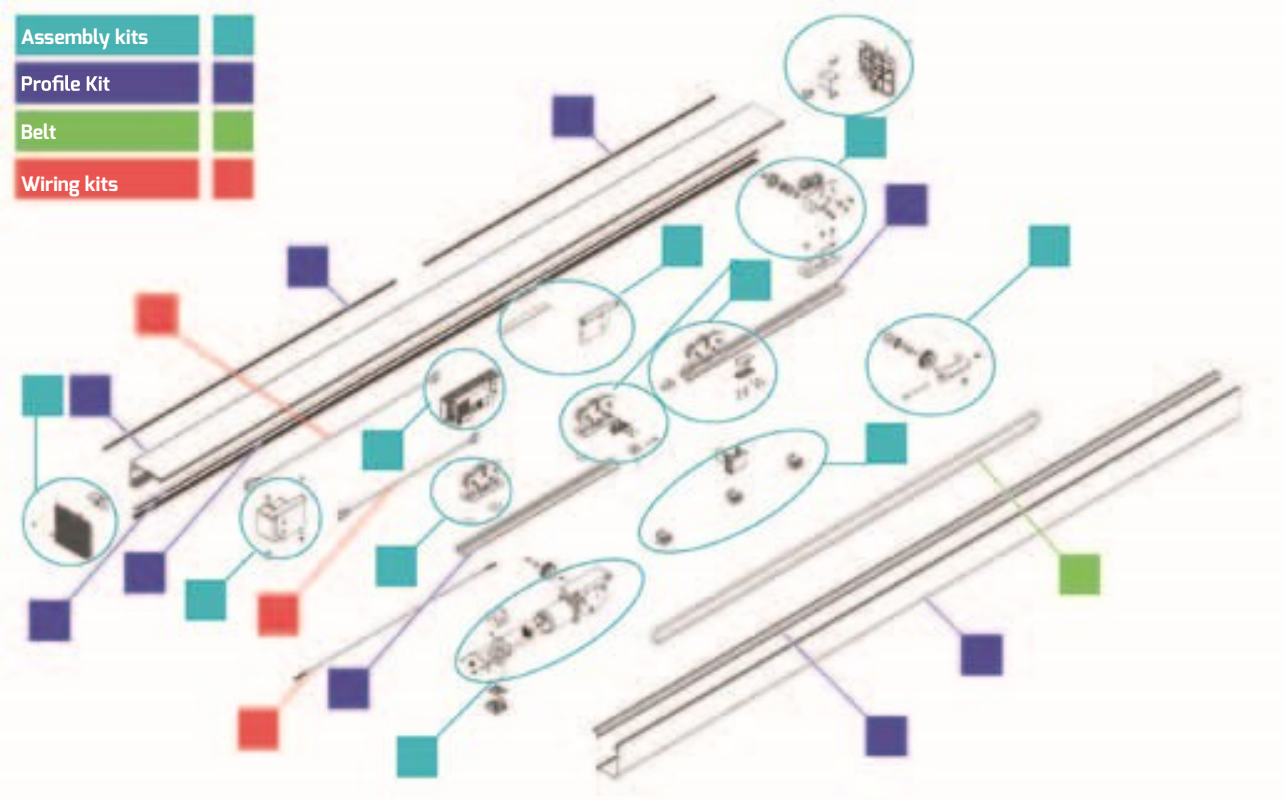

Assembly kit VISTA SL

Code	Name		Price (€)
P960621 00002	MOUNTING KIT MODULO VISTA SL1 LEAF EVO 230V	new	1206.20
P111749	EXPANSION KIT MODULO VISTA FOR 2 LEAVES	new	123.60
P960614 00001	KIT PROFILI VISTA SL 3M UTILE N	new	543.30
P960614 00002	KIT PROFILI VISTA SL 3M UTILE O	new	570.20
P960615 00001	KIT PROFILI VISTA SL 4.4M UTILE N	new	738.50
P960615 00002	KIT PROFILI VISTA SL 4.4M UTILE O	new	777.20
P960616 00001	KIT PROFILI VISTA SL 6M UTILE N	new	988.90
P960616 00002	KIT PROFILI VISTA SL 6M UTILE O	new	1034.00
D191099	CINGHIA DENTATA GOMMA RPP8-15 ANTIS. 30M	new	782.80